Question 1

- What are the two categories of data compression methods?

- *The two categories of data compression methods are lossless and lossy.*

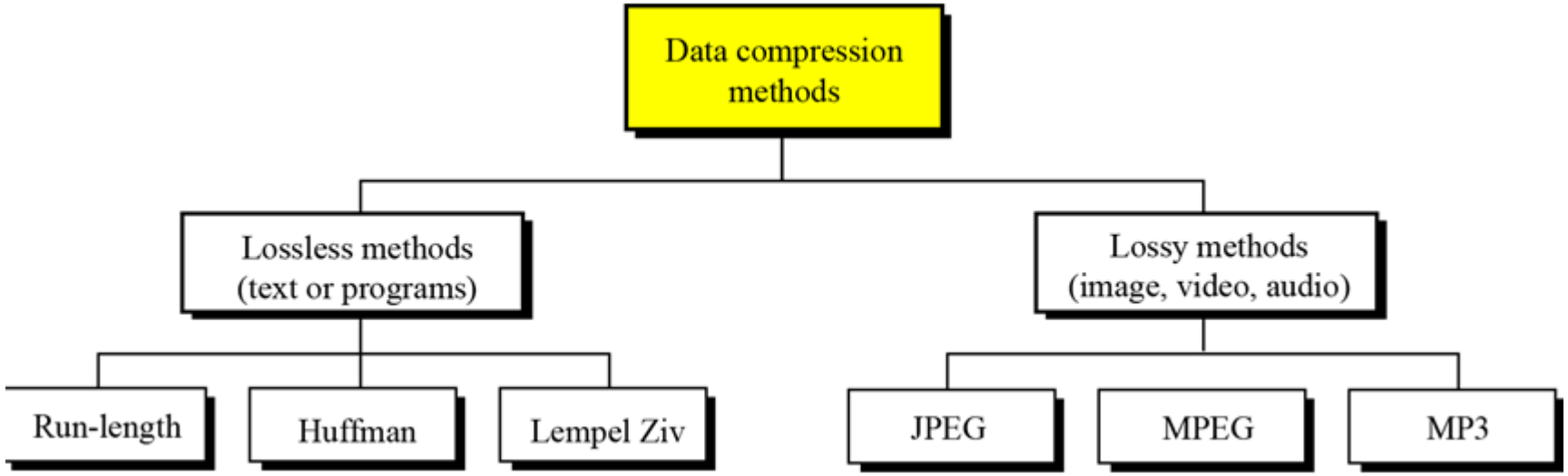

Question 2

- What is the difference between lossless compression and lossy compression?

- *Lossless compression preserves the integrity of the data; in lossy compression, some of the data is lost in the compression/ decompression process.*

Question 3

- What is run-length encoding?

- *Run length encoding is a lossless compression method in which repeated occurrences of a symbol are replaced by one occurrence of the symbol followed by the number of occurrences.*

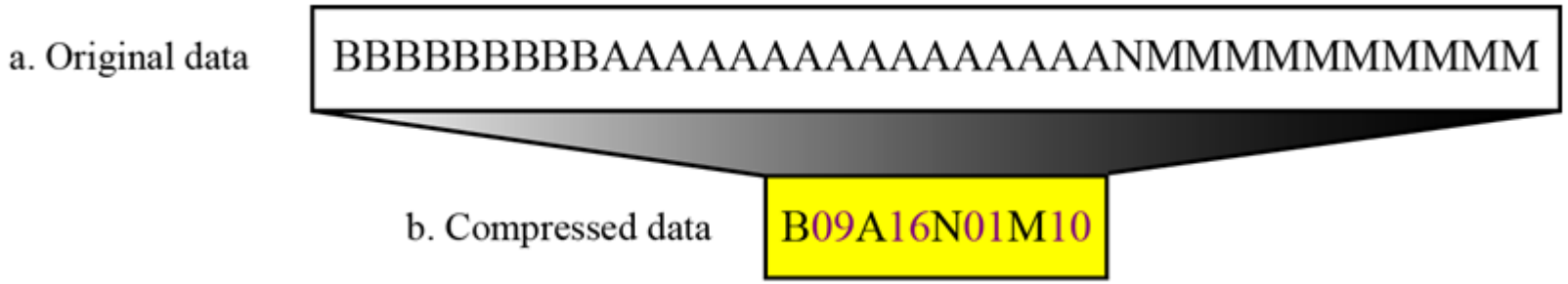

Continued

- Run-length encoding is probably the simplest method of compression. It can be used to compress data made of any combination of symbols. It does not need to know the frequency of occurrence of symbols and can be very efficient if data is represented as 0s and 1s.
- The general idea behind this method is to replace consecutive repeating occurrences of a symbol by one occurrence of the symbol followed by the number of occurrences.
- The method can be even more efficient if the data uses only two symbols (for example 0 and 1) in its bit pattern and one symbol is more frequent than the other.

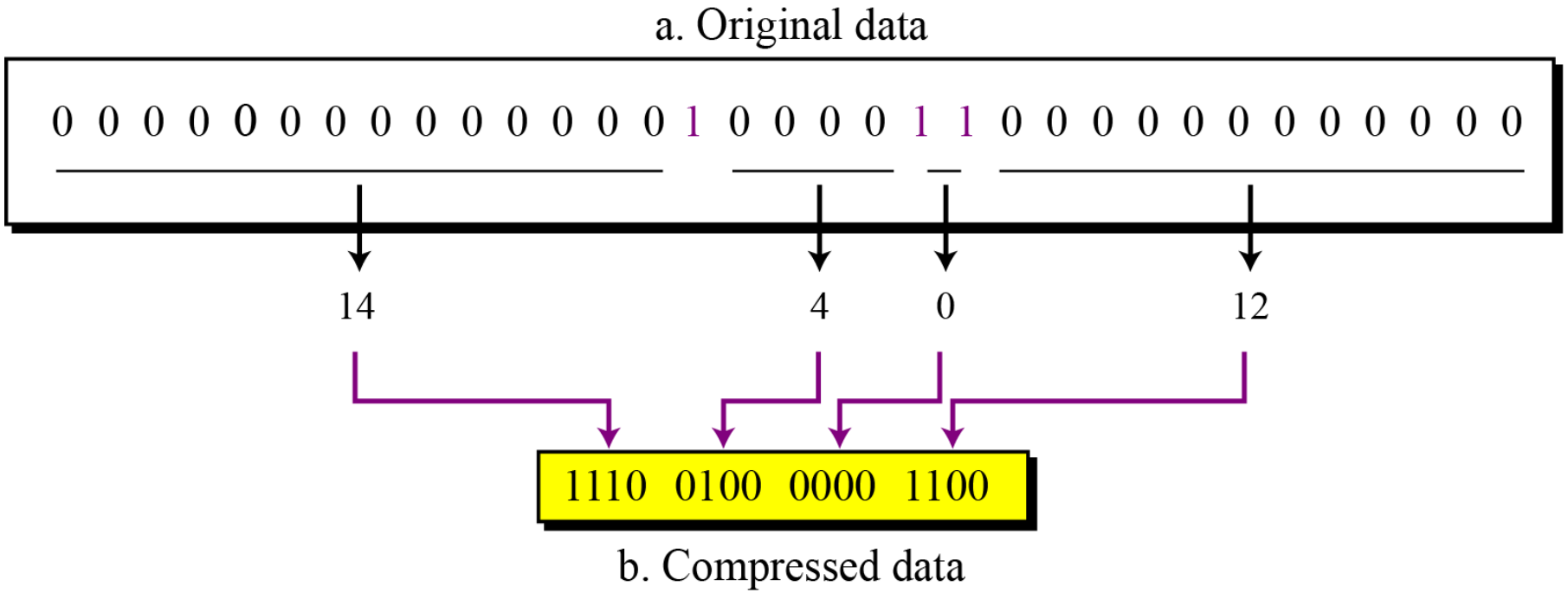

- there are fourteen 0s before the first 1. These fourteen 0s are compressed to the binary pattern 1110 (14 in binary).
- The next set of 0s is compressed to 0100 because there are four 0s.
- Next we have two 1s in the original data, which are represented by 0000 in the compressed data.
- Finally, the last twelve 0s in the data are compressed to 1100.

Question 4

- How does Lempel Ziv encoding reduce the amount of bits transmitted?

- *Lempel-Ziv (LZ) encoding is a type of dictionary-based, lossless compression method in which a dictionary is constructed during encoding.*
- *During decoding, the dictionary is reconstructed from the received data.*
- *During encoding or decoding, the already-encountered strings can be substituted by their index in the dictionary to reduce the amount of information transmitted.*

Question 5

- What is Huffman coding?

- *Huffman coding uses the frequency of the characters in the file to construct a tree. The tree is then used to generate codes for each character with the more frequent characters having shorter codes than the less frequent characters.*

Question 6

- What is the role of the dictionary in LZ encoding?

- *The dictionary in LZ encoding consists of indexed entries that refer to substrings in the original file. These indices are used to refer to future occurrences of these substrings.*

Question 7

- What is the advantage of LZ encoding over Huffman coding?

- *In Huffman coding, both the sender and receiver must have a copy of the same code in order for the decoded file to match the encoded file. In LZ encoding, the dictionary is generated from the data itself.*

Question 8

- Encode the following bit pattern using run-length encoding with 5-bit codes:

18 zeros, 11, 56 zeros, 1, 15 zeros, 11

- 10010 00000 11111 11001 01111 00000 00000

16+2=18 16+8+4+2+1 16+8+1 15

= 31 = 25

56

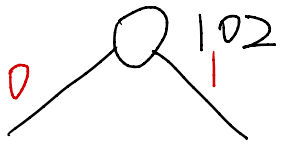

Question 9

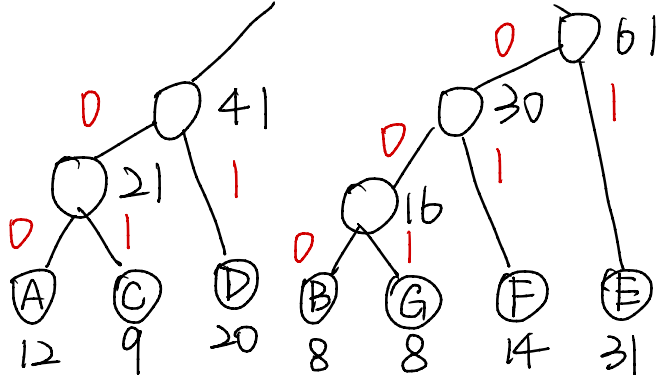

A = 000 F = 101
B = 1000 G = 1001
C = 001
D = 01
E = 11

- Encode the following characters using Huffman coding with the given frequencies:

A (12), B (8), C (9), D (20), E (31), F (14), G (8)

- *Different codes result from different ways of organizing the tree. One possible tree with the resulting code is shown Figure*

频率越高，分到的码越短

A: 000 E: 10
B: 1111 F: 110
C: 001 G: 1110
D: 01

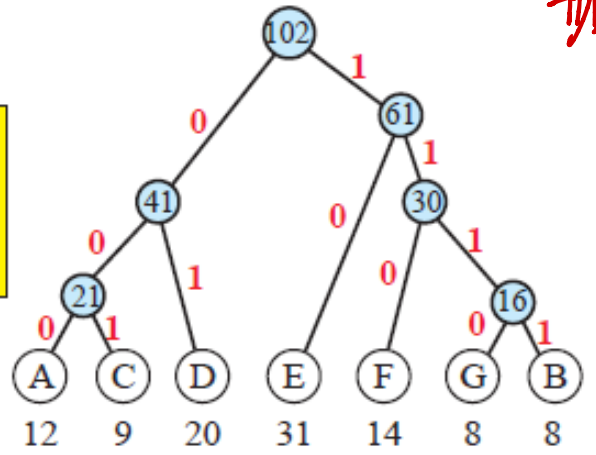

A character's code is found by starting at the root and following the branches that lead to that character. The code itself is the bit value of each branch on the path, taken in sequence.

Question 10

- Encode the message BAABBBBAACAA using the following Huffman code:

  A: 0 B: 10 C: 11

A= B= C=
6 5 1

A: 0
B: 10
C: 11

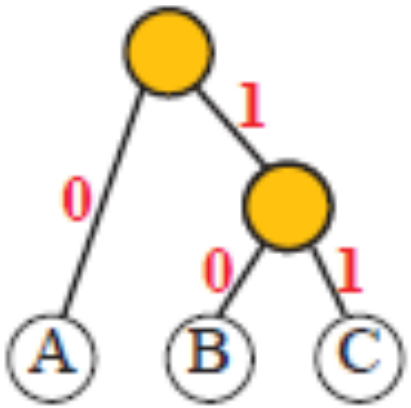

Question 11

- Decode the message 0|10|10|0|0|0|11|11|0 using the following Huffman code:

  A B B A A A C C A

  A: 0 B: 10 C: 11

  ABBAAACCA

  ABBAAACCA

Question 12

- Encode the message B|A|AB|BB|BA|AC|AA using the Lempel Ziv method, then decode the encoded message to get the original message.

B 1
A 2
AB 3
BB 4
BA 5
AC 6
AA 7

B A 2B 1B 1A 2C 2A

- Homework

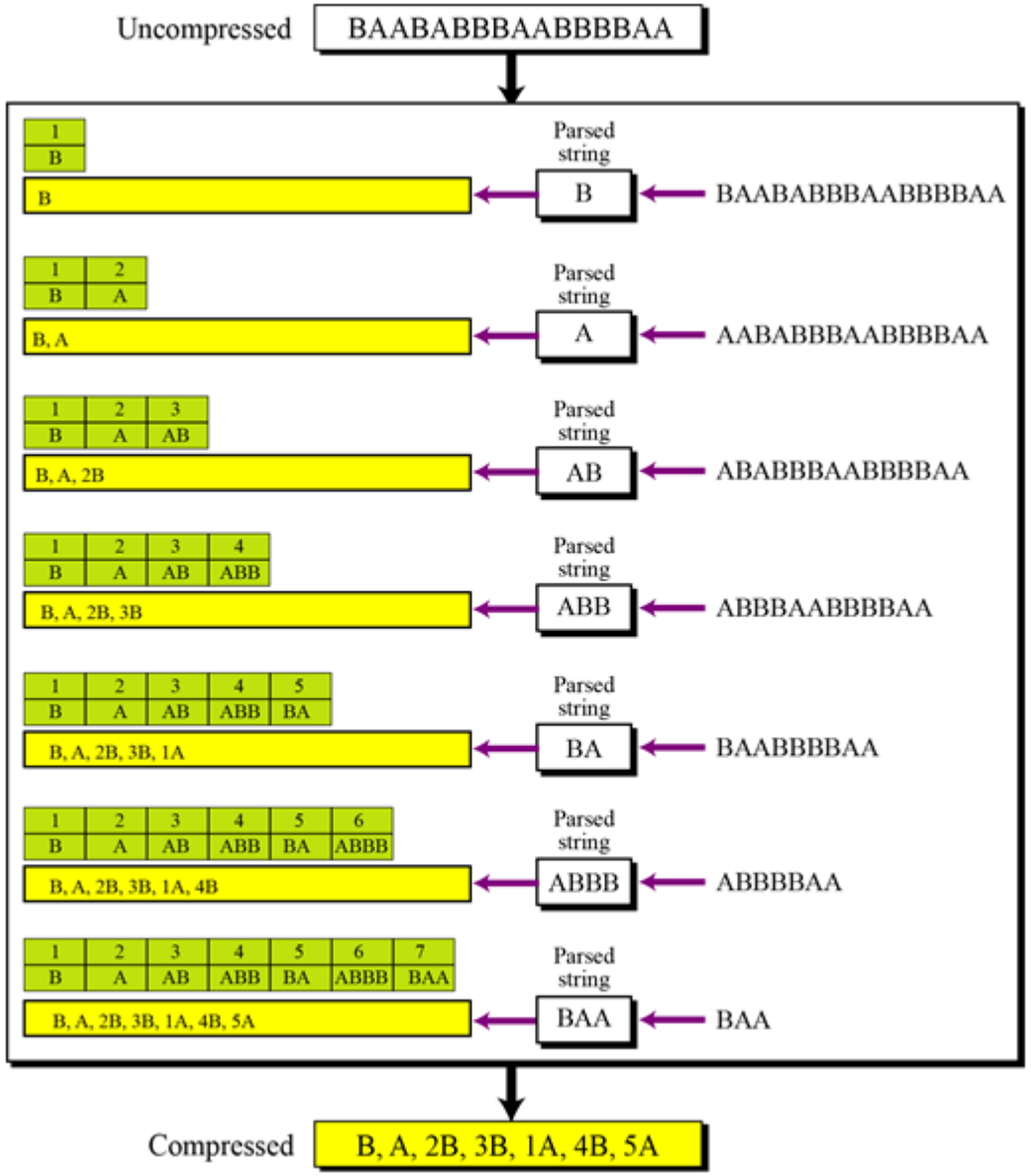

In this phase there are two concurrent events: building an indexed dictionary and compressing a string of symbols. The algorithm extracts the smallest substring that cannot be found in the dictionary from the remaining uncompressed string. It then stores a copy of this substring in the dictionary as a new entry and assigns it an index value. Compression occurs when the substring, except for the last character, is replaced with the index found in the dictionary. The process then inserts the index and the last character of the substring into the compressed string

Question 13

- Encode the string AAAABBCCCBBB (part of a message) using the Lempel Ziv method if the dictionary contains ABB. Show the final contents of the dictionary.

- *Decompression is the inverse of the compression process. The process extracts the substrings from the compressed string and tries to replace the indexes with the corresponding entry in the dictionary, which is empty at first and built up gradually. The idea is that when an index is received, there is already an entry in the dictionary corresponding to that index.*

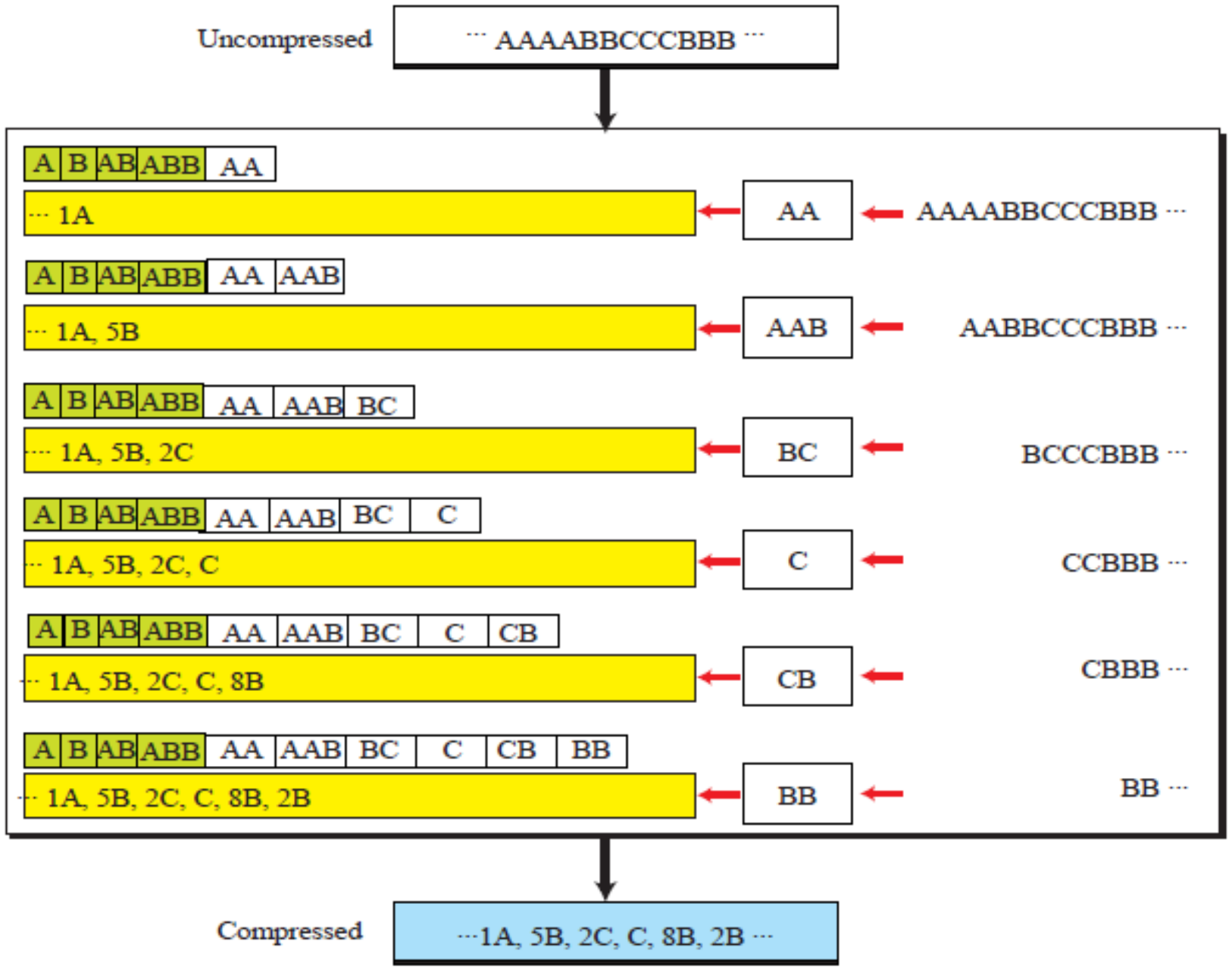

if the dictionary contains ABB, it must also have A, B, AB.

Question 14

- Prove the statement stated as under:

"If a receiver knows the message being transmitted, the amount of information carried will be zero."

- Here it is stated that receiver knows the message. This means that only one message is transmitted. Thus, probability of occurrence of this message will be P(xi) = 1. This is because only one message and its occurrence is certain (probability of certain event is ‘1'). The amount of information carried by this type of message will be,

$$I(x_i) = \log_2 \frac{1}{P(x_i)} = \frac{\log_{10} 1}{\log_{10} 2}$$

$$I(x_i) = 0 \text{ bits}$$

Question 15

- Verify the following expression:

$$I(x_i x_j) = I(x_i) + I(x_j) \text{ if } x_i \text{ and } x_j \text{ are independent}$$

Solution: If x_i and x_j are independent, then we know that

$$P(x_i x_j) = P(x_i)P(x_j)$$

Also

$$I(x_i x_j) = \log \frac{1}{P(x_i x_j)} = \log \frac{1}{P(x_i)P(x_j)} = \log \frac{1}{P(x_i)} + \log \frac{1}{P(x_j)}$$

or

$$I(x_i x_j) = I(x_i) + I(x_j)$$ **Hence Proved.**

Question 16

- Calculate the amount of information if it is given that $P(x_i) = ¼$.

- 2bits $I(x_i) = \log_2 \frac{1}{P(x_i)} = \log_2 4 = 2\text{ bit}$

Question 17

- A Discrete Memoryless Source (DMS) X has four symbols x_1 x_2, x_3, x_4 with probabilities

  $P(x_1) = 0.4$, $P(x_2) = 0.3$, $P(x_3) = 0.2$, $P(x_4) = 0.1$.

  (i) Calculate H(X).

  (ii) Find the amount of information contained in the messages x_1 x_2 x_1 x_3 and x_4 x_3 x_3 x_2, and compare with the H(X) obtained in part (i).

Cont'd

Solution: (i) We know that entropy is given by

$$H(X) = -\sum_{i=1}^{4} P(x_i)\log_2[P(x_i)]$$

Substituting values and simplifying, we get

$$H(X) = -0.4\log_2 0.4 - 0.3\log_2 0.3 - 0.2\log_2 0.2 - 0.1\log_2 0.1$$

Solving, we get

$$H(X) = 1.85 \text{ b/symbol} \quad \textbf{Ans.}$$

Cont'd

(ii) Now, we have $P(x_1\, x_2\, x_1\, x_3) = (0.4)(0.3)(0.4)(0.2) = 0.0096$

Therefore, $I(x_1x_2x_1x_3) = -\log_2 0.0096 = 6.70$ b/symbol* **Ans.**

Thus, $I(x_1x_2x_1x_3) < 7.4$ [= 4H(X)] b/symbol

Also, $P(x_4x_3x_3x_2) = (0.1)(0.2)^2(0.3) = 0.0012$

Therefore $I(x_4x_3x_3x_2) = -\log_2 0.0012 = 9.70$ b/symbol

We conclude that, $I(x_4x_3x_3x_2) > 7.4$[= 4H(X)] b/symbol **Ans.**

Question 18
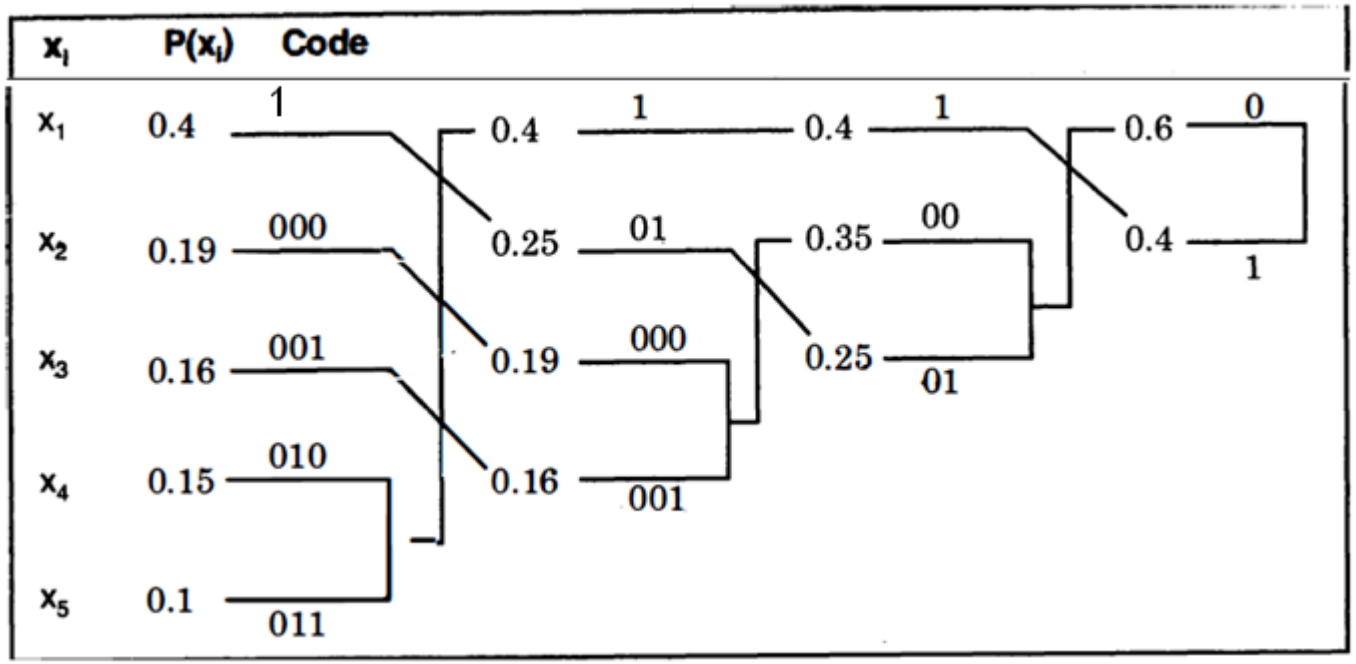
- A DMS X has five symbols x1 , x2, x3, x4, and x5 with P(x1) = 0.4, P(x2) = 0.19, P(x3) = 0.16, P(x4) = 0.15, and P(x5) = 0.1.
- Construct a Huffman code for X, and calculate the efficiency of the code.